This is a computer aided drawing and must not be altered manually

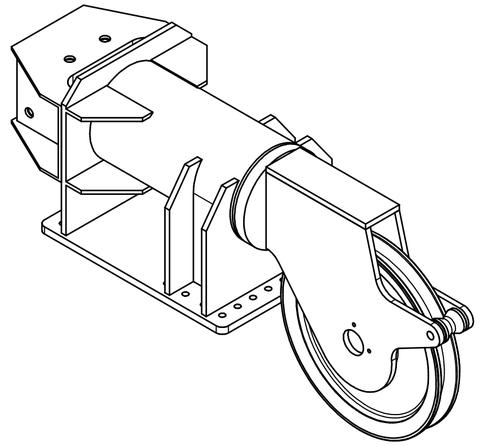

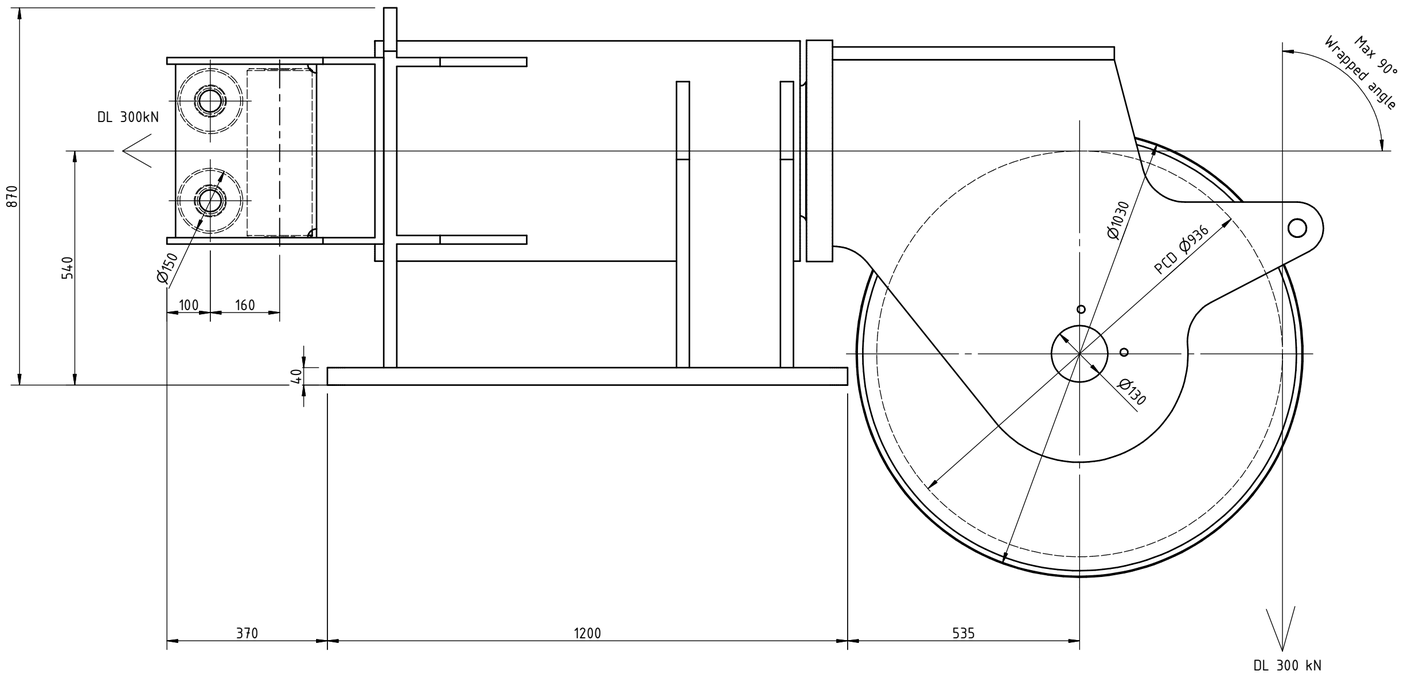

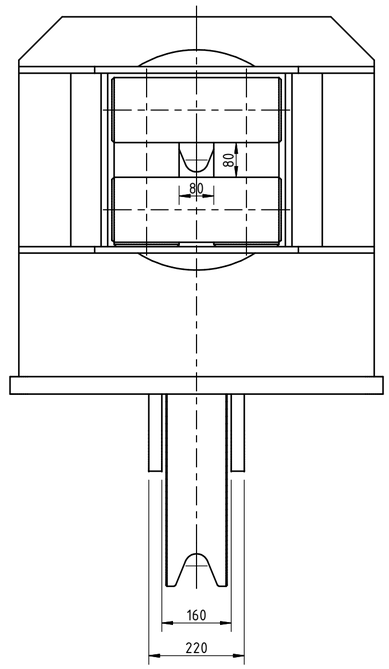

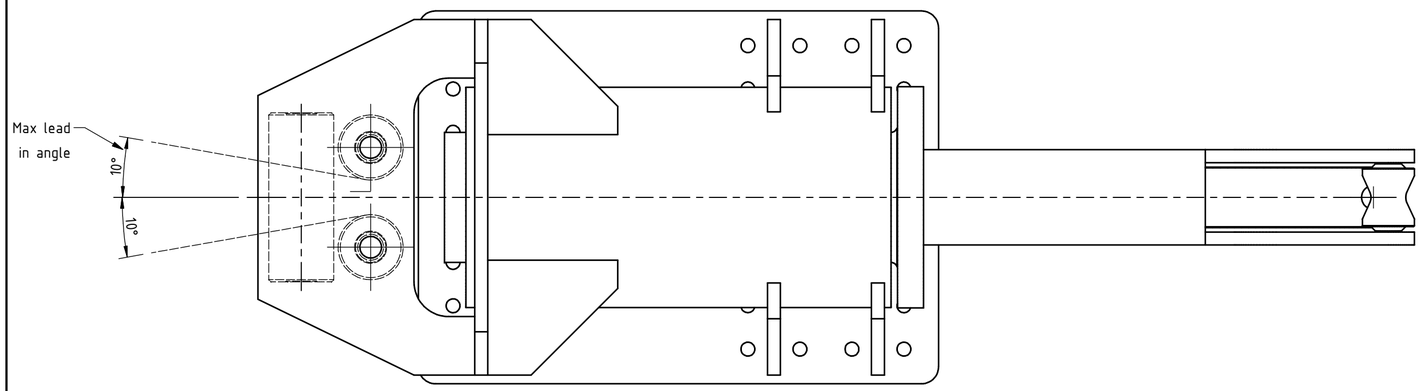

Notes:

Design & manufacturing in acc with DNV lifting appliances.
Max rope pull= 300kN
Max wrapped angle= 90 DGR
Max fleet angle on rope inlet = 10 DGR
Weight 3190 kg
Design temp= -20°C

Rev.	Date	Note	drw. by	chck	Appr.
1	24.05.12	Issued for comments	SW		

Tol. prin: ISO 8015	Fits. Tol.: ISO 286	Geom. tol: ISO 1101	Gen. Tol.: ISO 2768-1m	Gen. Roughness: 3.2	Break all sharp edges
Projection:	Sheet size: A2	Scale:	Document type:	Repl. for: / Ref:	Repl. by:

Gleipnir AS
Longhammarvegen 7 - N-5536 HAU
www.gleipnir.no - post@gleipnir.no

Title: Lead block - P - R - ST - 936x1030/160
Max rope pull 300 kN
For ø52mm Rope

Drwg. No.:	Rev.:	Sheet	Total Weight.:
01215-1		1 /1	N/A

This document and all information and data disclosed herein or herewith are the confidential and proprietary property of GLEIPNIR AS and are not to be used, reproduced or disclosed in whole or in part by or to anyone without the written permission of GLEIPNIR AS. Contravention will be prosecuted.