This is a computer aided drawing and must not be altered manually

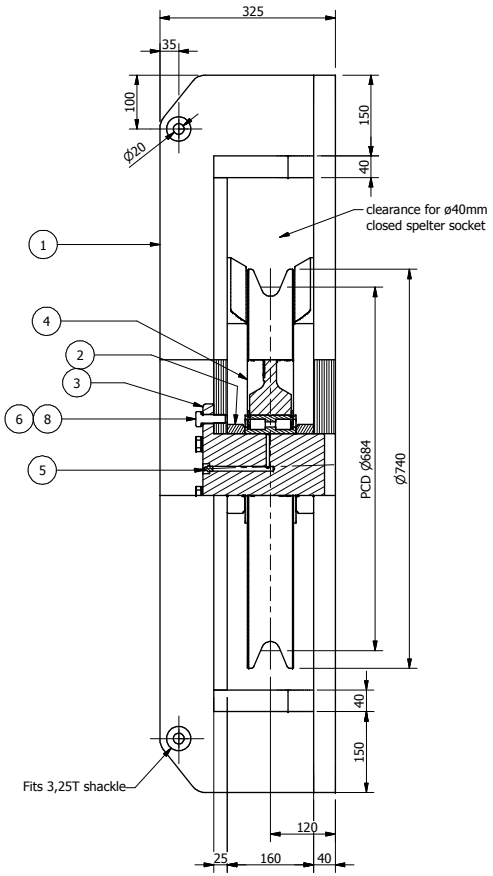

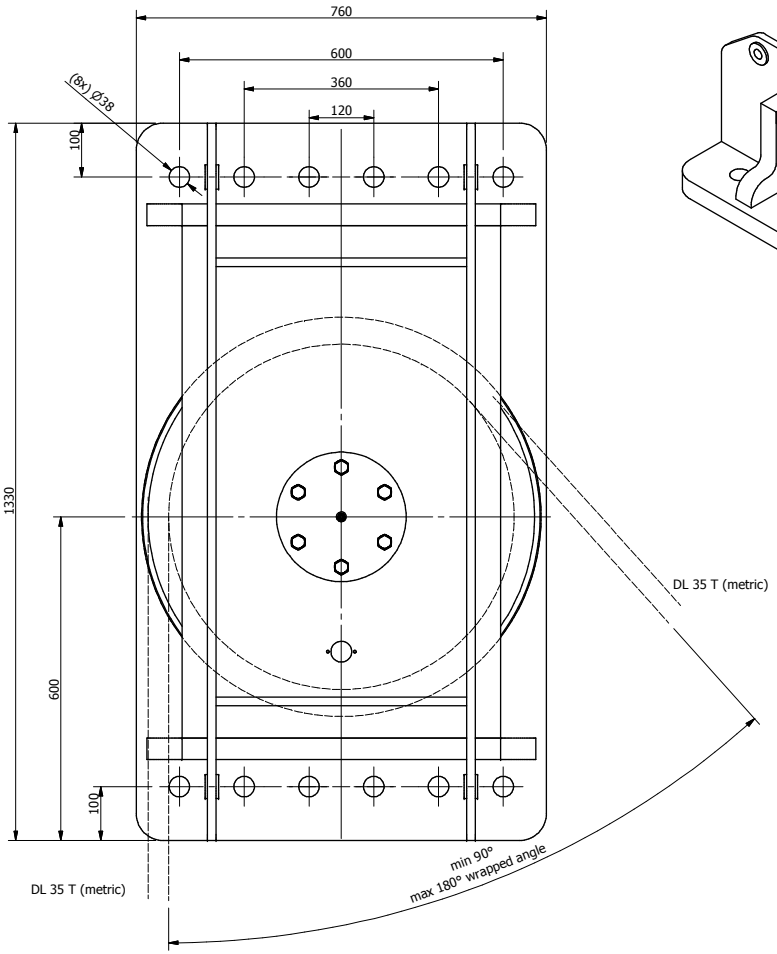

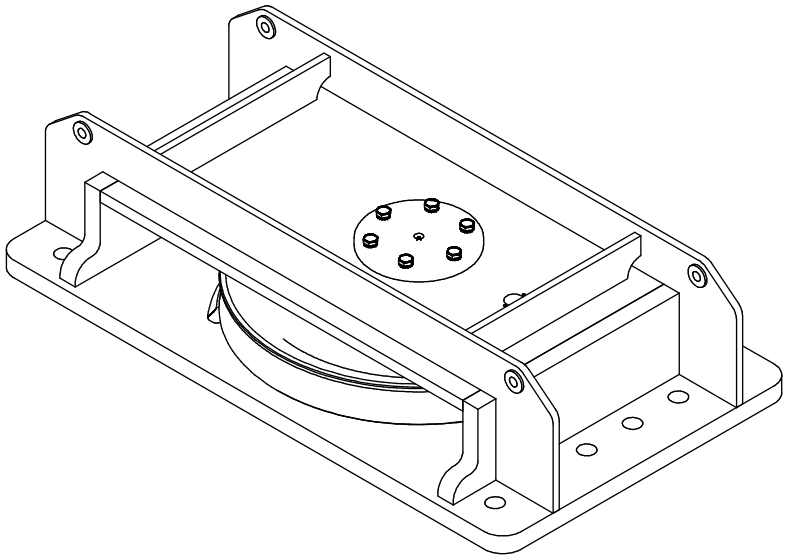

Notes:

DL: 35T Wire pull (metric & incl all factors)
Wrapped angle: As indicated on drawing
TD: -20°C

MBL: 4:1

Connection: 12x M36 grade 8.8
- Pretension: 415 kN

Design and manufacturing in accordance with:

DNV - Standard for certification - No 2.22
- Lifting appliances

NOTE: Pad eyes are for lifting of the Lead block only
Load factor applied: 2
Only for internal lifting. Not for on-loading/off loading
from vessel at sea.

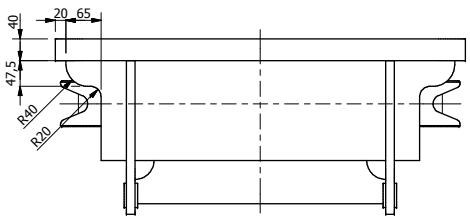

Item	Qty	Description	Designation	Material	Mass
8	6	Screw - M16x50 - HDG	ISO 4017	Gr 8.8	0,1 kg
6	6	Washer - Nord-Lock - NL16	NL16		0 kg
5	1	Lubricating Nipple - M10x1	DIN 71412	A4	0 kg
4	1	Standard sheave ø740xø640x95	01-0007-XX		90,1 kg
3	1	Bearing pin - 130x205	01164-0	St	28,1 kg
2	2	Bearing spacer - 130x165/32,5	01163-0	St	2 kg
1	1	Block house - Horizontal	01162-1	St	548,3 kg

Rev	Date	Note	drw. by	chck	Appr.
1	22.07.12	Dim. added	SW	JAV	

Gleipnir
Longhammerveien 7
5536 Haugesund - Norway

post@gleipnir.no
www.gleipnir.no

Projection:	Tol. prin: ISO 8015	Gen. Tol.: ISO 2768-1m	Geom. tol: ISO 1101
Sheet size: A2	Scale:	Repl. for:	Repl. by:

Title: Lead Block - H - W - 684x740
for max ø24 - ø40 wire
DL 35T (metric)

Drwg. No.: 01165-1 | Rev.: 1

Reference: | Sheet: 1 of 1

This document and all information and data disclosed herein or hereunto are the confidential and proprietary property of GLEIPNIR AS and shall not be used, reproduced or disclosed in whole or in part or to anyone without the written permission of GLEIPNIR AS. Contravention will be prosecuted.